SINK SPECIFICATIONS

SILGRANIT® Pinnacle Series

BLANCOPERFORMA EQUAL DOUBLE BOWL Undermount

Models 515-546, 515-547, 515-549, 515-550, 515-551

BLANCO

FEATURED MODEL

515-551 **Café Brown, 10" and 10" bowl depths**

ADDITIONAL MODELS

515-546 **Metallic Gray, 10" and 10" bowl depths**

515-547 **White, 10" and 10" bowl depths**

515-549 **Biscuit, 10" and 10" bowl depths**

515-550 **Anthracite, 10" and 10" bowl depths**

FEATURES

- 80% rock hard granite
- Color all the way through
- Highly resistant to scratching, staining and all household acids and alkali solutions
- Non-porous, easy-to-clean
- Heat resistant to 536° F
- Extremely hygienic, does not absorb odors or bacteria

CODE/STANDARDS COMPLIANCE

ANSI Z124.6-97

IAPMO/UPC listed

OPTIONAL ACCESSORIES

Sink Grids: 222-469 (Right Bowl)
222-429 (Left Bowl)

Cutting Board: 222-587

WARRANTY

Blanco America's SILGRANIT® Series sinks feature a LIMITED LIFETIME WARRANTY to be free of all manufacturing defects under normal use. See our complete warranty for details.

While Blanco America endeavors to provide accurate information, all dimensions are nominal, cannot be guaranteed, and are subject to change or cancellation. Blanco America assumes no responsibility for use of superseded or voided specifications.

PRODUCT SPECIFICATION

Undermount sink to be equal double bowl design, 33" in length and 20" in front-to-back depth. Sink to be made from Silgranit® hard composite material. Sink to feature rear drain placement with left bowl depth of 10" and right bowl depth of 10". Sink to be Blanco (Check one)

❑ Model 515-546 ❑ Model 515-547
❑ Model 515-549 ❑ Model 515-550
❑ Model 515-551

❑ Metallic Gray 515-546 ❑ White 515-547
❑ Biscuit 515-549 ❑ Anthracite 515-550
❑ Café Brown 515-551

MODEL 515-551

NOMINAL DIMENSIONS

OVERALL	CUTOUT SIZE	BOWL DEPTH LEFT	BOWL DEPTH RIGHT	DRAIN DIAMETER
33 x 20	Template provided with approximate 1/8" reveal	10	10	3-1/2

DXF cutout templates available on our web site.

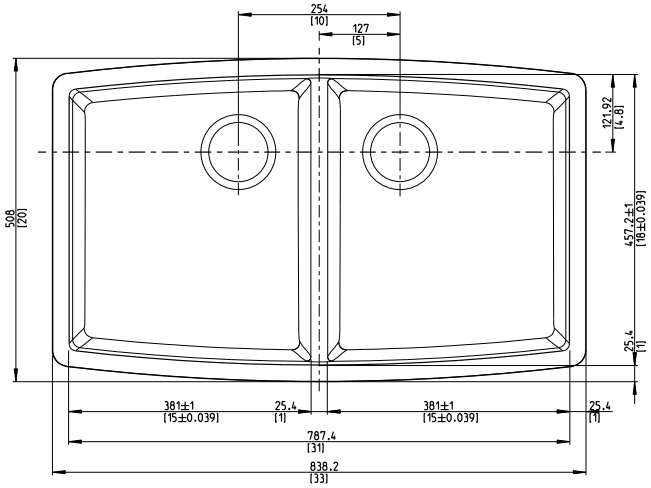

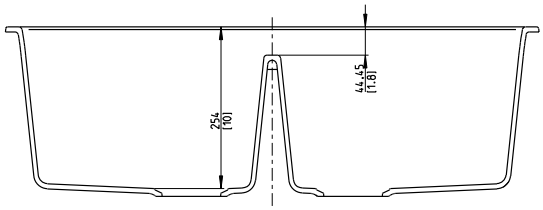

JOB INFORMATION

Job Name: _____

Contact: _____

Date Specified: _____

Specifier: _____

Contractor: _____

BLANCO AMERICA
800.451.5782
www.blancoamerica.com

© 2008 BLANCO AMERICA