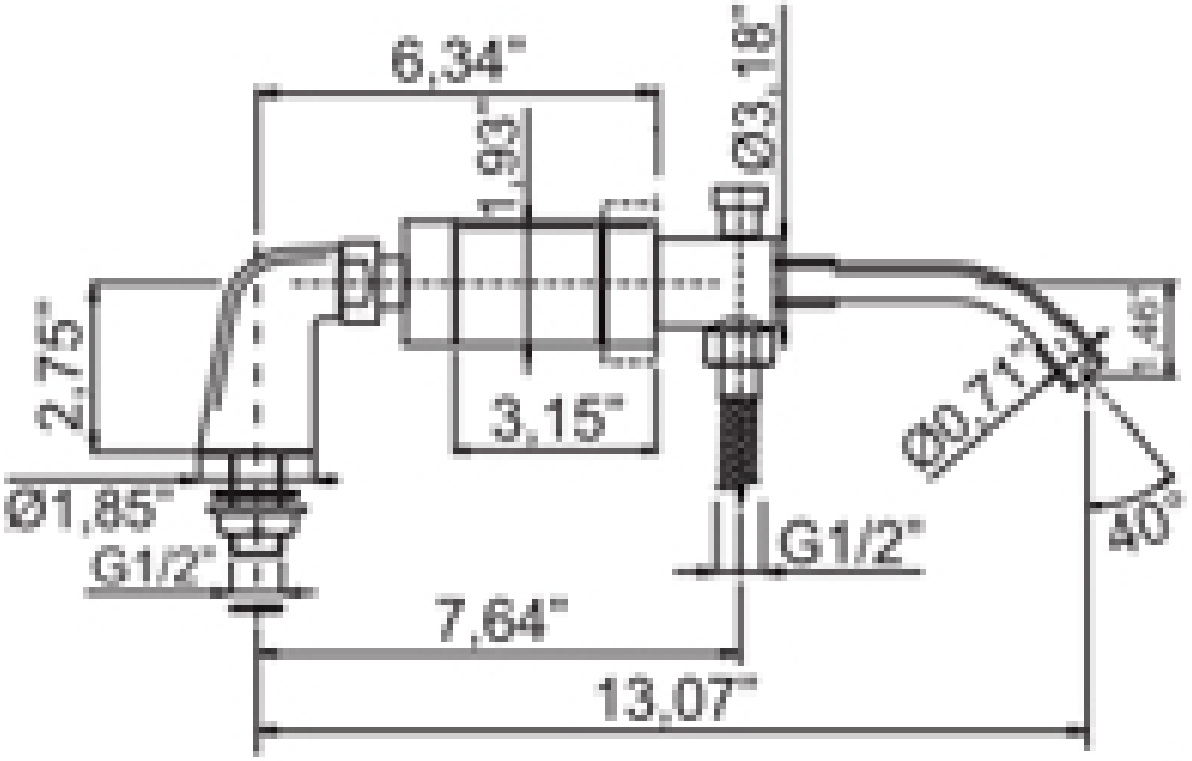
6,34"
1,93"
Ø3,19"
2,75"
3,15"
Ø0,71"
40°
Ø1,85"
G1/2"
G1/2"
7,64"
13,07"

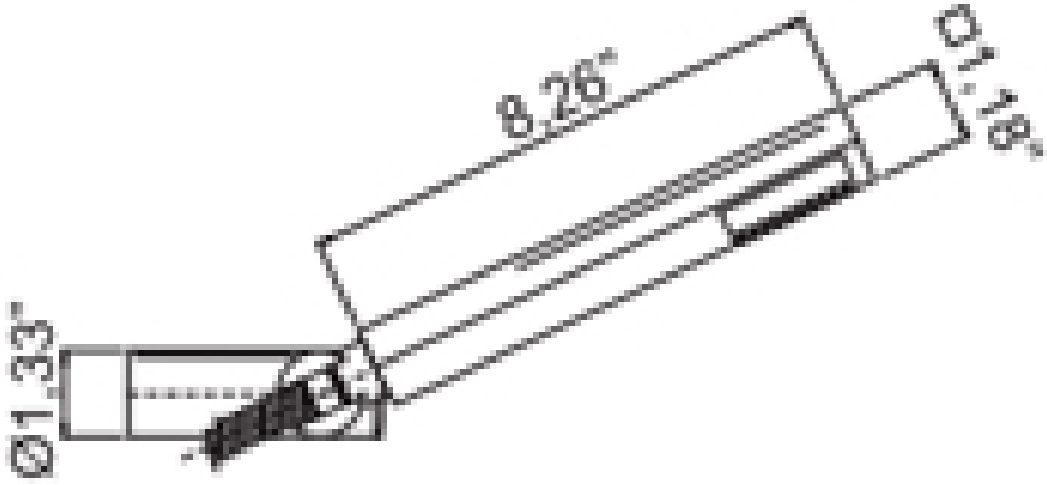
8,26"
0,16"
Ø1,33"

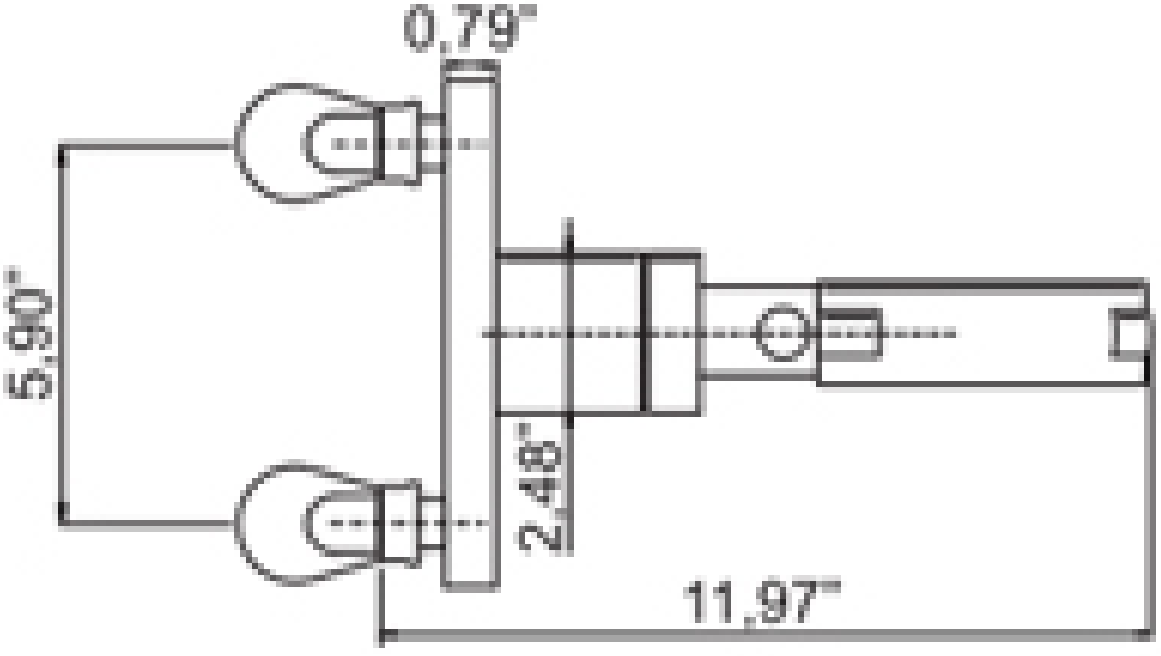
0,79"
5,90"
2,48"
11,97"