KB8951,2,5,8NDL
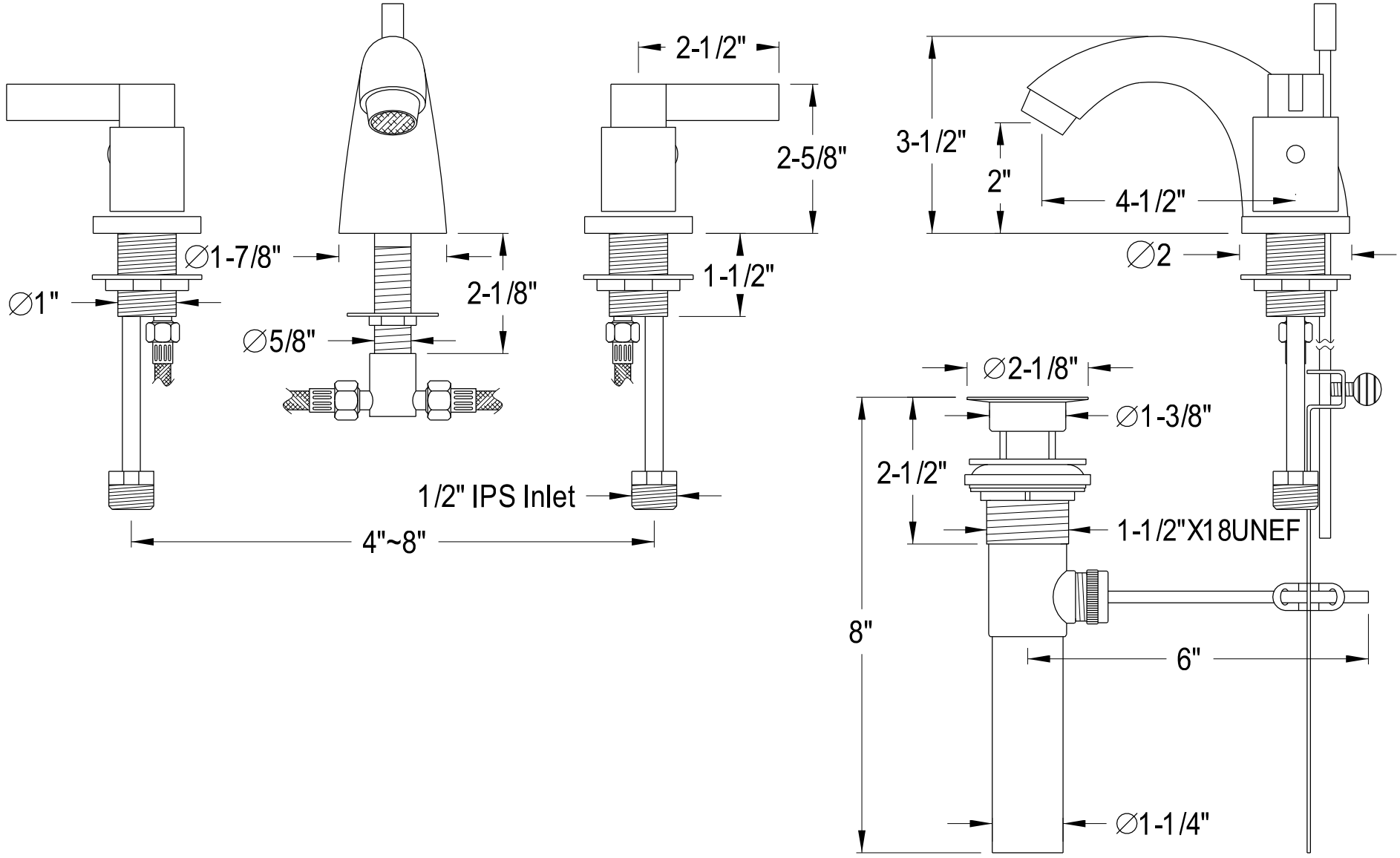
Mini Widespread Lavatory Faucet With Brass Pop-Up